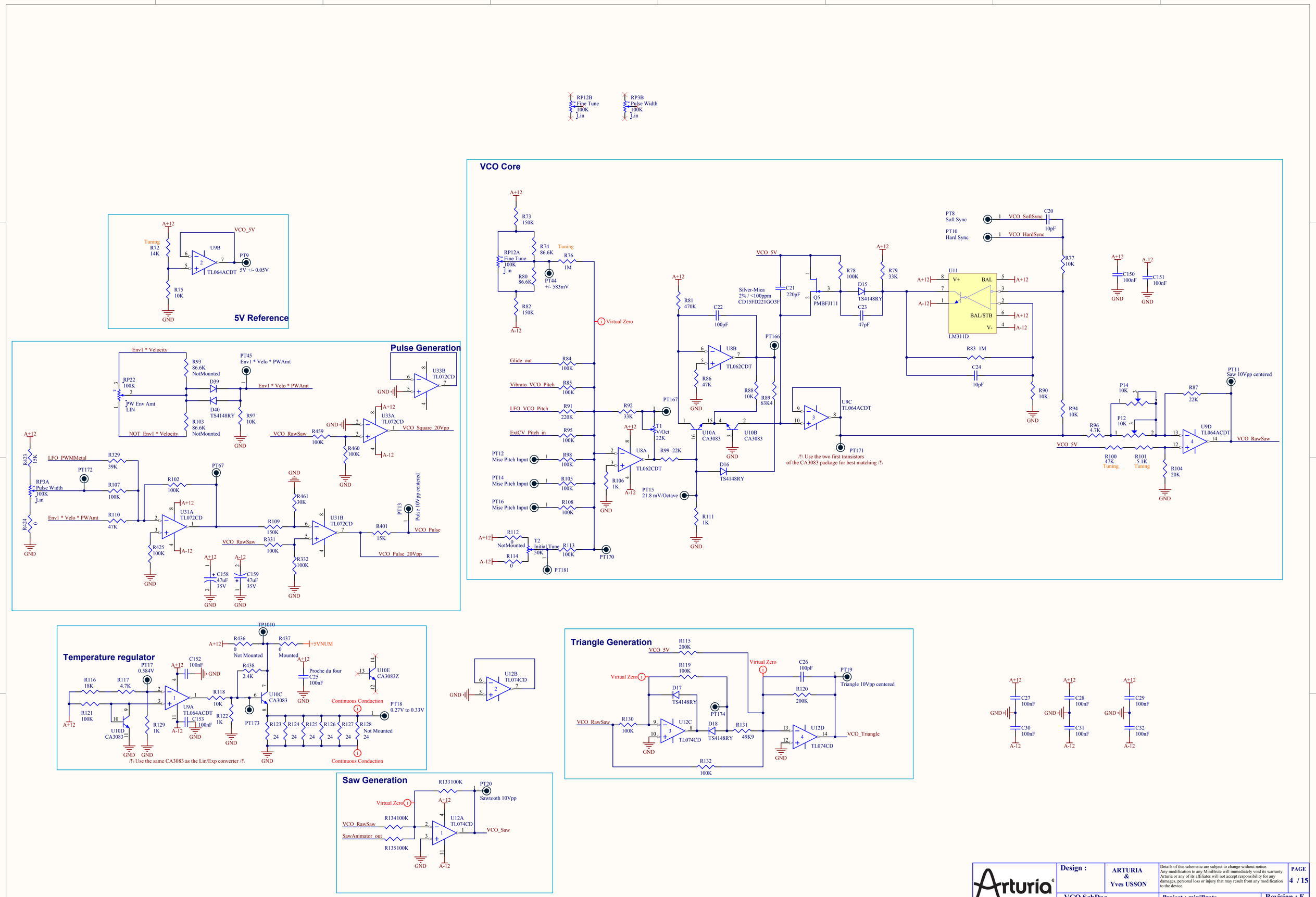
5V Reference
Pulse Generation
VCO Core
Temperature regulator
Triangle Generation
Saw Generation
/!\ Use the two first transistors of the CA3083 package for best matching /!\
/!\ Use the same CA3083 as the Lin/Exp converter /!\
Arturia
Design :
ARTURIA & Yves USSON
Details of this schematic are subject to change without notice. Any modification to any MiniBrute will immediately void its warranty. Arturia or any of its affiliates will not accept responsibility for any damages, personal loss or injury that may result from any modification to the device.
PAGE 4 / 15
VCO.SchDoc
Schematics
Project : miniBrute
13001 - AnalogBoard
Revision : F
Public Release