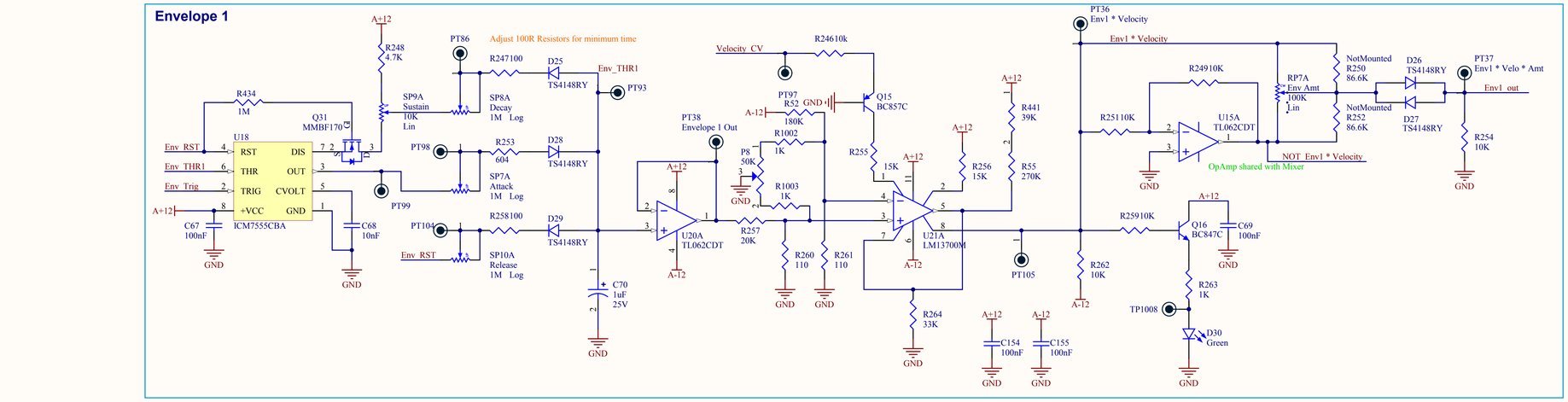
Envelope 1
A+12
R248
4.7K
PT86
Adjust 100R Resistors for minimum time
R247100
D25
TS4148RY
Env_THR1
PT93
R434
1M
Q31
MMBF170
SP9A
Sustain
10K
Lin
SP8A
Decay
1M Log
U18
Env_RST
Env_THR1
Env_Trig
A+12
RST
THR
TRIG
+VCC
DIS
OUT
CVOLT
GND
ICM7555CBA
PT98
R253
604
D28
TS4148RY
SP7A
Attack
1M Log
PT99
C67
100nF
C68
10nF
PT104
R258100
D29
TS4148RY
Env_RST
SP10A
Release
1M Log
C70
1uF
25V
PT38
Envelope 1 Out
U20A
TL062CDT
Velocity_CV
R24610k
PT97
R52
180K
Q15
BC857C
R1002
1K
P8
50K
R1003
1K
R257
20K
R260
110
R261
110
R255
15K
U21A
LM13700M
R264
33K
R256
15K
R441
39K
R55
270K
PT105
C154
100nF
C155
100nF
PT36
Env1 * Velocity
R25110K
R24910K
U15A
TL062CDT
RP7A
Env Amt
100K
Lin
NotMounted
R250
86.6K
NotMounted
R252
86.6K
D26
TS4148RY
D27
TS4148RY
PT37
Env1 * Velo * Amt
Env1_out
R254
10K
NOT_Env1 * Velocity
OpAmp shared with Mixer
R25910K
Q16
BC847C
C69
100nF
R262
10K
R263
1K
TP1008
D30
Green
C156
47uF
35V
C157
47uF
35V
GND

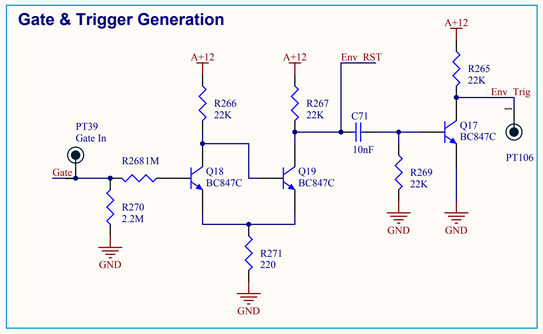
Gate & Trigger Generation
A+12
Env_RST
R266
22K
R267
22K
C71
10nF
R265
22K
Env_Trig
PT39
Gate In
Gate
R2681M
Q18
BC847C
Q19
BC847C
Q17
BC847C
PT106
R269
22K
R270
2.2M
R271
220
GND

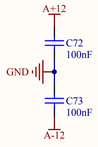
A+12
C72
100nF
GND
C73
100nF
A-12

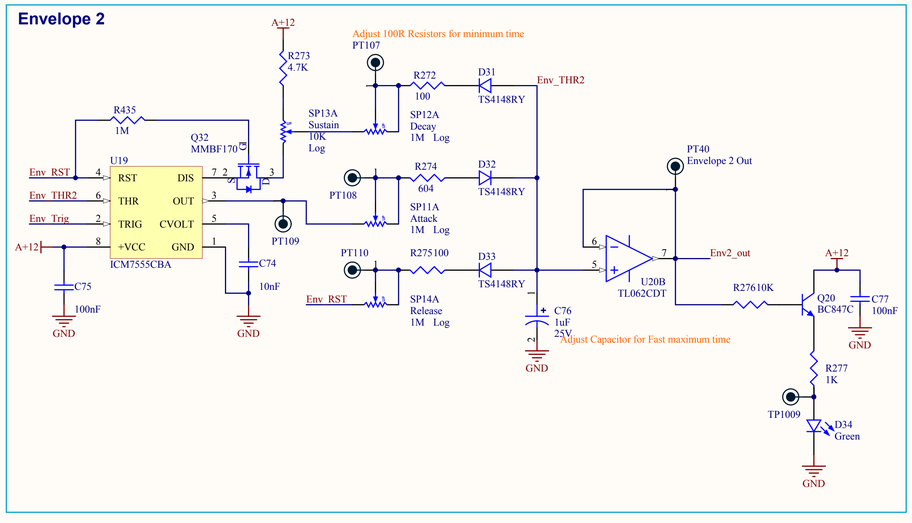
Envelope 2
A+12
R273
4.7K
Adjust 100R Resistors for minimum time
PT107
R272
100
D31
TS4148RY
Env_THR2
R435
1M
SP13A
Sustain
10K
Log
SP12A
Decay
1M Log
Q32
MMBF170
U19
Env_RST
Env_THR2
Env_Trig
A+12
RST
THR
TRIG
+VCC
DIS
OUT
CVOLT
GND
ICM7555CBA
PT108
R274
604
D32
TS4148RY
SP11A
Attack
1M Log
PT109
C75
100nF
C74
10nF
PT110
R275100
D33
TS4148RY
Env_RST
SP14A
Release
1M Log
C76
1uF
25V
Adjust Capacitor for Fast maximum time
PT40
Envelope 2 Out
U20B
TL062CDT
Env2_out
R27610K
Q20
BC847C
C77
100nF
R277
1K
TP1009
D34
Green
GND

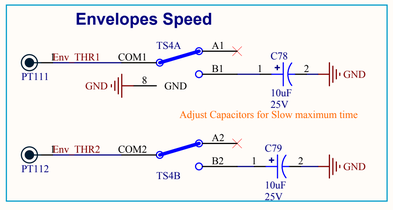
Envelopes Speed
PT111
Env_THR1
COM1
TS4A
A1
B1
C78
10uF
25V
GND
Adjust Capacitors for Slow maximum time
PT112
Env_THR2
COM2
A2
B2
TS4B
C79
10uF
25V